ROTARY VALVE CAM ENGINE

Original Filed June 26, 1967 3 Sheets-Sheet 1

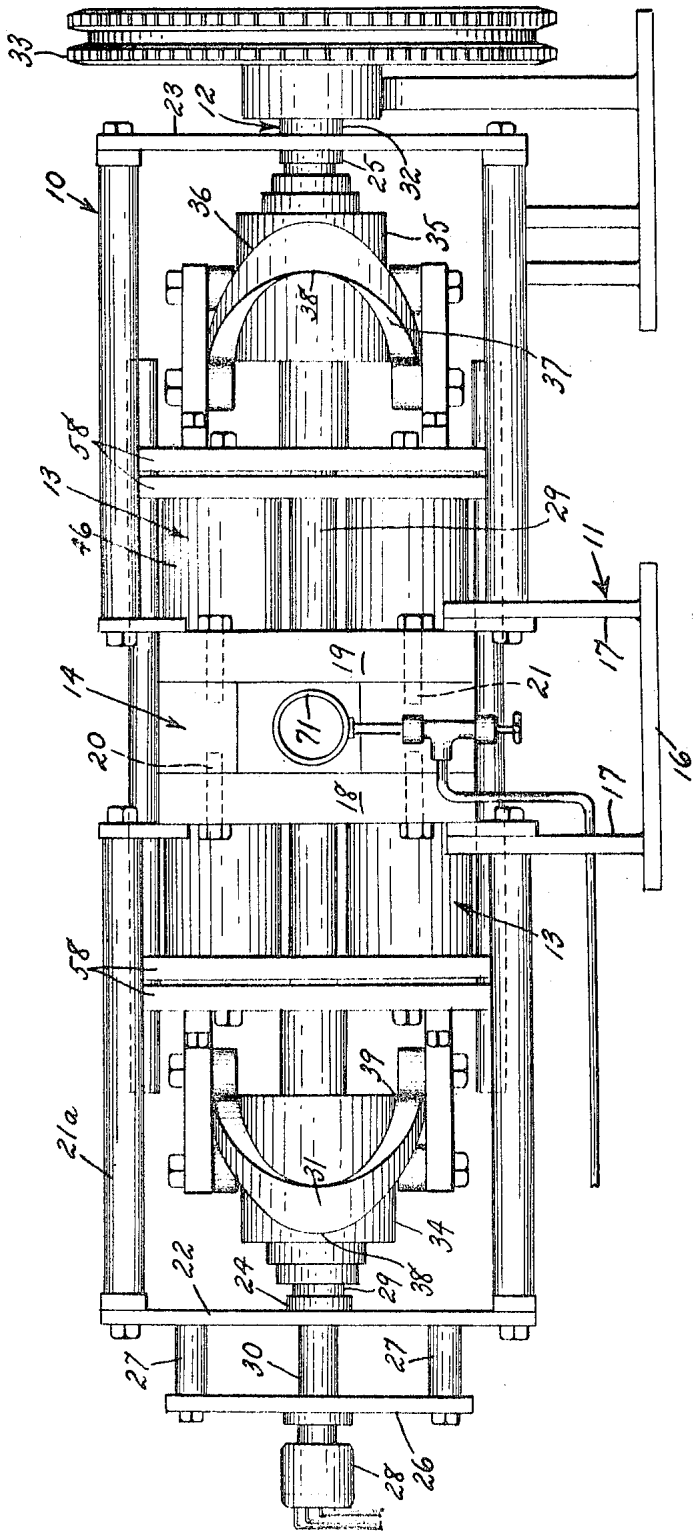

Fig. 1

ROTARY VALVE CAM ENGINE

Original Filed June 26, 1967 3 Sheets-Sheet 2

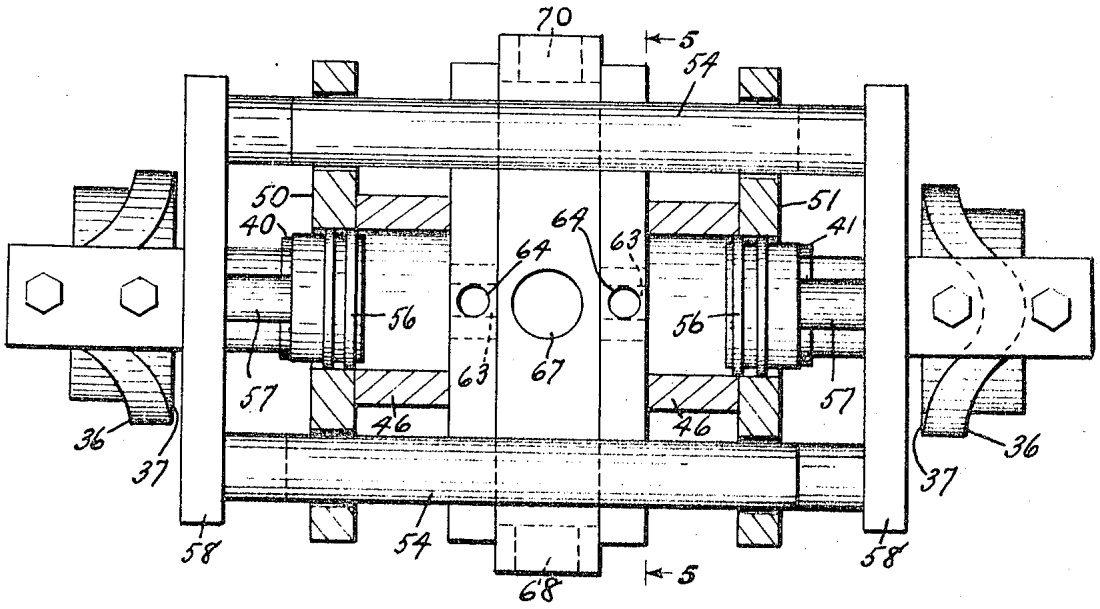

Fig. 2

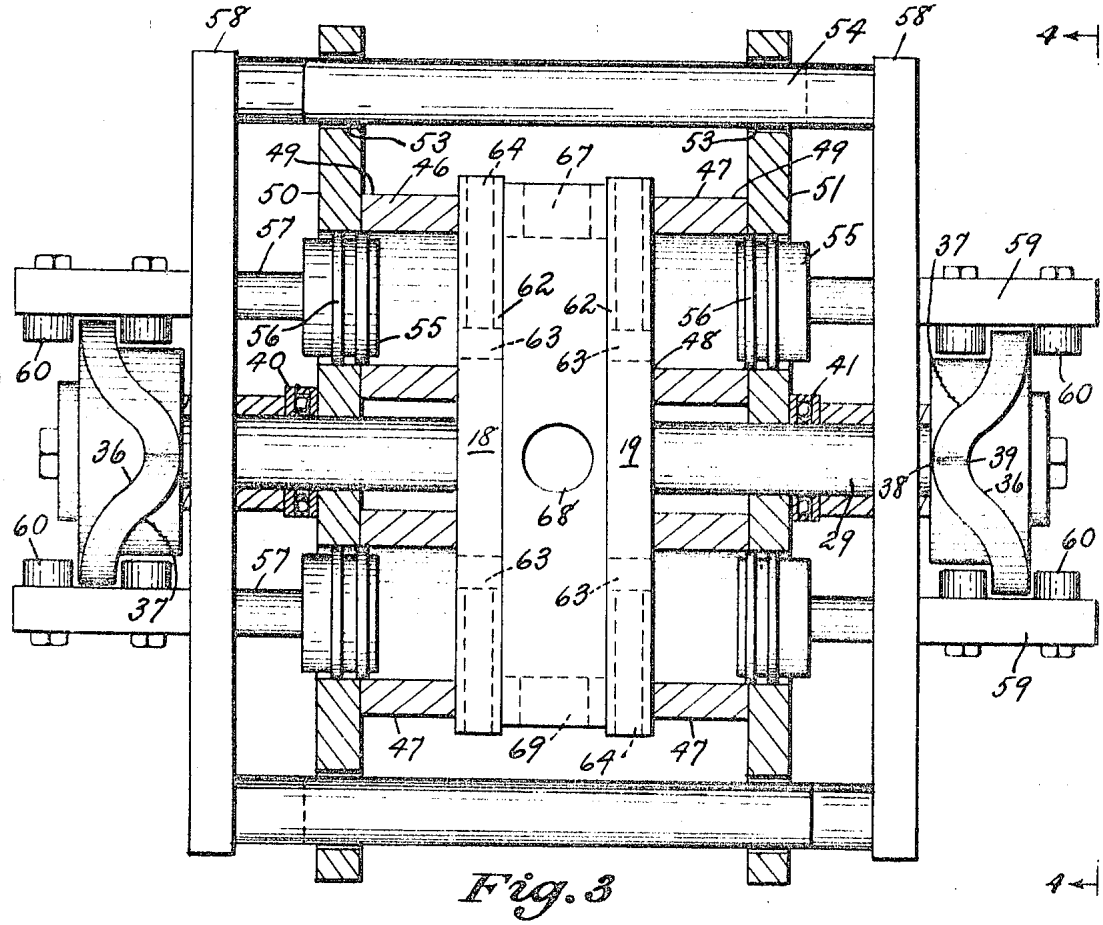

Fig. 3

ROTARY VALVE CAM ENGINE

Original Filed June 26, 1967 3 Sheets-Sheet 3

Fig. 5

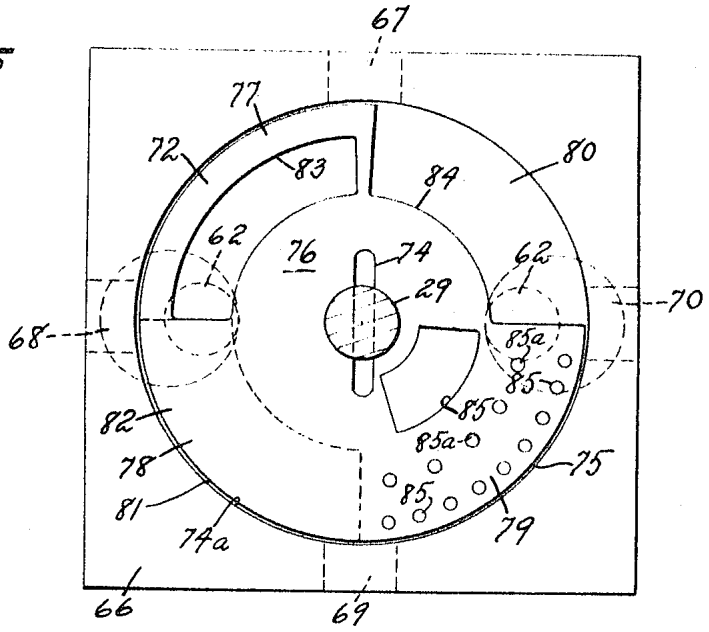

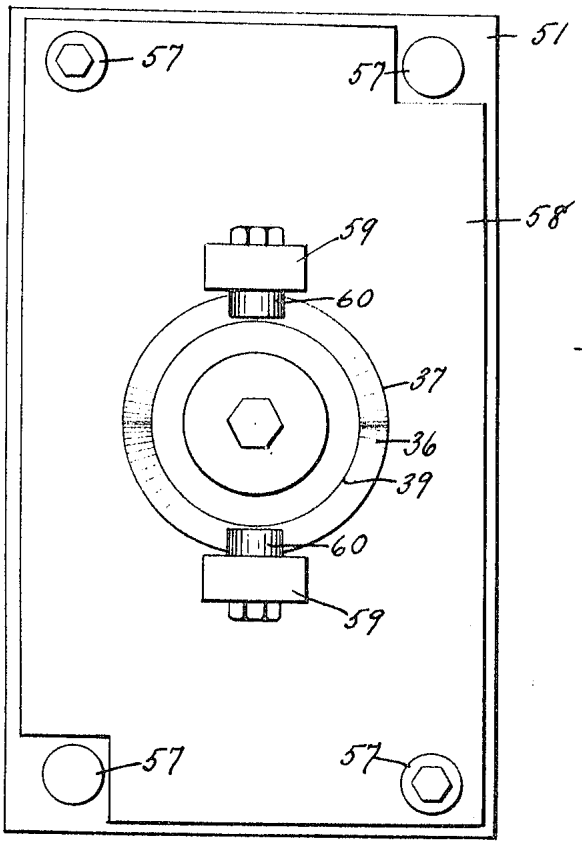

Fig. 4

United States Patent Office

3,456,630

Patented July 22, 1969

1

3,456,630
ROTARY VALVE CAM ENGINE

Paul Karlan, New York, N.Y. (Karlan Tool Co., 620 Ogden Ave., Mamaroneck, N.Y. 10543)

Continuation of application Ser. No. 648,554, June 26, 1967. This application Sept. 16, 1968, Ser. No. 759,919
Int. Cl. F02b *75/26*
U.S. Cl. 123—58 4 Claims

ABSTRACT OF THE DISCLOSURE

An internal combustion engine in which the cylinders thereof are axially aligned paralleled to the axis of a rotating driven shaft. The shaft mounts a rotating valve having induction and exhaust passages which simultaneously communicate with opposed pairs of cylinders in which the pistons are axially aligned and instantaneously performing an identical portion of a firing cycle with lines of action in opposite senses along the common axis.

This application is a continuation of my copending application, Ser. No. 648,554, filed June 26, 1967, now abandoned.

This invention relates generally to the field of internal combustion engines, and more particularly to an improved form of cam engine in which the pistons are fixedly mounted upon one end of a connecting rod, and the opposite end thereof engages a cam on a driven shaft to impart rotary motion thereto.

It is among the principal objects of the present invention to provide in an engine of the above described class a compact configuration obtained by placing the axes of the cylinders in parallel relation with respect to the principal axis of the motion output shaft, whereby the engine may be particularly suited for use in small boats, aircraft and the like.

Another object of the invention lies in the provision of a cam engine in which the pistons execute a normal four-cycle function during each revolution of the driven shaft without resort to gear reduction means.

Another object of the invention lies in the provision of an improved internal combustion engine in which the pistons thereof are supported for operation without side reaction through contact with the cylinder walls, and can be operated with the output shaft thereof either vertically or horizontally positioned.

Yet another object of the invention lies in the provision of an improved internal combustion engine in which induction and exhaust functions are performed by a single rotating disc valve mounted directly upon the driven shaft for rotation therewith.

Still another object of the invention lies in the provision of an internal combustion cam engine which, because of the relative reciprocation of the component parts is inherently in balance, without resort to counter weights, vibration dampers, and the like.

A further object of the invention lies in the provision of an internal combustion engine of the class described which may be conveniently fabricated using a minimum number of parts, whereby the total cost of production on a volume basis, may be materially less than that encountered in the manufacture of conventional internal combustion engines.

A feature of the invention lies in the ready adaptability of the disclosed embodiment to fuel injection diesel operation or carburetion.

Another feature of the invention lies in the ready adaptability of the disclosed embodiment to either air or liquid cooling.

2

Still another feature of the invention lies in the high torque available at low operational speeds, effective engine displacement considered.

Another feature of the invention lies in the elimination of timing gears and valve springs in a four cycle engine.

These objects and features, as well as other incidental ends and advantages, will more fully appear in the progress of the following disclosure, and be pointed out in the appended claims.

In the drawing, to which reference will be made in the specification, similar reference characters have been employed to designate corresponding parts throughout the several views.

FIGURE 1 is side elevational view of an embodiment of the invention.

FIGURE 2 is a schematic top plan view showing the moving components of the embodiment.

FIGURE 3 is a schematic side elevational view as seen from the lower portion of FIGURE 2.

FIGURE 4 is a schematic and elevational view thereof, as seen from the right hand portion of FIGURE 3.

FIGURE 5 is a transverse sectional view as seen from the plane 4—4 in FIGURE 3.

In accordance with the invention, the device, generally indicated reference character **10**, comprises broadly a frame element **11**, a motion output shaft element **12**, a plurality of cylinder and piston assemblies **13**, and rotary valve element **14**.

The frame element **11**, as best seen in FIGURE 1 in the drawing, includes a base plate **16** for mounting the device **10** on a horizontal surface (not shown). Extending upwardly from the base plate are a plurality of vertical support members **17** which interconnect with first and second centrally disposed plates **18** and **19** which are interconnected by longitudinally extending bolts **20**. The plates **18** and **19** are of solid configuration, and form on the interior portions thereof cylinder heads or manifolds for the assemblies **13**, as will more fully appear hereinafter.

Extending longitudinally from the plates **18** and **19** are support rods **21***a*, the outer ends of which engage first and second end plates **22** and **23**, respectively. The end plates define generally centrally located openings in which main bearings **24** and **25** are positioned to support the shaft element **12**. These bearings handle radially directed loads, that is to say the weight of the shaft element **12**, separate thrust bearings being provided to absorb power impulses.

A subframe **26** is supported on rods **27** interconnected with the plate **22** to support the fixed portions of a distributor or magnet **28**, the rotor portion thereof being driven directly by the end of the shaft element **12**.

The shaft element **12** includes the main shaft **29**, a first end **30** communicating with the above mentioned distributor **28**, and a second end **32** which supports a combined flywheel and starter ring gear **33** of well known type. Intermediate to ends **30** and **32** are a pair of ribbed barrel cams **34** and **35** each including opposed cam faces **36** and **37**. Each cam **34–35** includes two symmetrically disposed high points **38** and corresponding low points **39** which may be modified too for dwell areas. Thrust bearings **40** and **41** transmit thrust directly to the plates **18** and **19**, as do radical bearings and, respectively, whereby, in conjunction with the bearings **24** and **25**, the shaft **29** is limited to pure rotation about its own axis.

The cylinder and piston assemblies **13** are best understood from a consideration of FIGURES 2 and 3. Each assembly includes a cylinder sleeve **46** having an exposed surface **47** for air or liquid cooling (not shown). The inner ends **48** of the sleeves **46** are connected to one of the plates **18–19** which, as has been mentioned, functions as a cylinder head or manifold. The outer ends **49**

thereof are connected to a supporting plate **50–51** by bolts **51***a*, respectively. The plates **50–51** are similar, each being provided with corresponding openings for the sleeves **46**, as well as openings **53** which form bearings for sliding guide rods **54**. The pistons **55** are provided with conventional piston rings **56** for forming a seal with the inner surface of the sleeves **46**, and are rigidly connected to connecting rods **57** in any suitable manner, but preferably not including conventional wrist pins since no relative pivotal movement is required between the rods and pistons, the rods **57** being connected to alignment plates **58** which also mount the guide rods **54**, and the cam follower mounts **59** are provided with roller bearings **60** which coact with the cam faces **36–37** on one of the barrel cams **34–35**.

As best seen in FIGURES 2 and 5, the portions of the plates **18–19** which function as cylinder heads, and indicated by reference character **62** are provided with a single port **63** through which unburned gasses pass into the cylinder, and exhaust gasses are removed. The ports **63** are axially aligned for opposed cylinders, as best seen in FIGURE 3 in the drawing. As seen in FIGURE 2, spark plug openings **64** may be provided for each cylinder, but, as will more fully appear, one spark plug may be used to simultaneously fire two cylinders where desired.

The rotary valve element **19** is best understood from a consideration of FIGURE 5, and includes a generally rectangularly shaped valve housing **66** having first, second, third and fourth ports **67, 68, 69** and **70**, respectively.

Carburetors, one of which is indicated by reference character **71** communicate with ports **68** and **70**, and, if desired, ports **67** and **69** may be provided with muffler means (not shown). A rotary valve body **72** is mounted on the shaft **29**, and fixed relative thereto by keying means **74**, so as to be disposed within a circular chamber **74***a* in the housing **66**. The body **72** is bounded by a curved peripheral surface **75** and a pair of planar surfaces **76** which form means for sealing the ports **63** during the compression and power strokes of any given piston.

Referring to FIGURE 5, the body **72** is divided into an intake quadrant **77** a compression quadrant **78**, a power quadrant **79** and an exhaust quadrant **80**. These quadrants are serially presented to each pair of opposed cylinder and piston assemblies as the shaft **29** rotates, to permit the opening of the cylinder for the induction of a combustible mixture, the subsequent closing of the cylinder for compression and power strokes, and the later opening of the ports **63** to permit the burned gasses to be exhausted.

For convenience in location of the ports **67–70**, the channel **81** providing for induction of gasses includes a peripherally opened portion **82** and a radially opened portion **83** which together extend over an arcuate distance of slightly less than 180 degrees. The exhaust channel **84** is both peripherally and radially open over the same arcuate distance, that is to say slightly less than 90 degrees.

From a consideration of FIGURES 2, 3, and 5, it will be apparent during the revolution of the main shaft **29** through 360 degrees, each of the cylinder and piston assemblies will have completed a single four stroke cycle of operation, and with two cylinders firing simultaneously in opposite directions along a common axis, four power strokes will be obtained for each revolution. As the device operates, the reciprocating masses are at all times equally balanced, so that axial vibration is practically non-existent. The valve body **72** is most conveniently balanced by milling areas as indicated by reference character **85**, or if desired, suitable counter weights (not shown) may be employed. Through holes **85***a* connect between opposed cylinders to provide equal compression in those cylinders during the combustion or power stroke.

Where diesel operation is preferable, the carburetors **71** may be substituted by suitable fuel injection means (not shown) timed to operate simultaneously with the alignment of the valve body **72** with the ports **63**. Where the device is gasoline operated, lubrication is best accomplished by mixing lubricating oil with the fuel as is normally done in the operation of two cycle engines.

It will be observed that by virtue of the presence of the guide rods **54**, and the reciprocating plates **58**, there is substantially no side wall reaction between the pistons and the cylinder walls, all side wall reaction being absorbed by the rods within respective bearings.

I wish it to be understood that I do not consider the invention limited to the precise details of structure shown and set forth in this specification, for obvious modifications will occur to those skilled in the art to which the

I claim:

1. In a cam type internal combustion engine having a relatively stationary frame element, a motion output shaft having a principal axis supported for rotation in said frame element, barrel cams mounted upon said shaft, and cylinders surrounding said shaft and having principal axes parallel to that of said shaft, improved valving means comprising: a valve housing having first, second, third and fourth ports, carburetors communicating with two oppositely disposed ports, exhaust means communicating with the other two of said ports, a rotary valve body mounted on said motion output shaft and disposed within said housing, said body being bounded by a curved peripheral surface and a pair of parallel planar surfaces, said last mentioned surfaces sealing said ports during compression and power strokes in any given cylinder, said body including intake, compression, power and exhaust quadrants serially presented to coaxially aligned cylinders as said shaft rotates.

2. Structures in accordance with claim **1** in which said body includes a peripherally opened portion and a communicating radially opened portion which together extend over substantially 180 degrees.

3. Structure in accordance with claim **1**, said cylinders being arranged in coaxially aligned pairs on opposite sides of said valve housing and including a pair of plates connected thereto in direct communication with said valve housing to serve as intake and exhaust manifolding therefor.

4. Structure in accordance with claim **1**, said cylinders being arranged in coaxially aligned pairs on opposite sides of said valve housing and including a first pair of plates connected thereto in direct communication with said valve housing to serve as intake and exhaust manifolding therefor, all of said cylinders being interconnected to one of a second pair of plates lying in a plane perpendicular to the principal axes of said cylinders, a plurality of guide rods aligned in mutually parallel relation for reciprocation through said first and second pair of plates, a third pair of plates mounted upon said guide rods for reciprocation therewith, pistons arranged for reciprocation in said cylinders, and piston rods interconnecting said pistons to one of said third pair of plates; and cam follower means carried by said third pair of plates engaging said barrel cams; whereby said pistons move without substantial side reaction against the inner walls of said cylinders, said side reaction being substantially carried by said guide rods.

References Cited

UNITED STATES PATENTS

1,788,140 1/1931 Woolson.

FOREIGN PATENTS

264,893 1/1927 Great Britain.

WENDELL E. BURNS, Primary Examiner